www.EconomO.fr - Tel.: 01.84.16.97.95 - email : info@economo.fr - Fax : 09 56 80 08 74

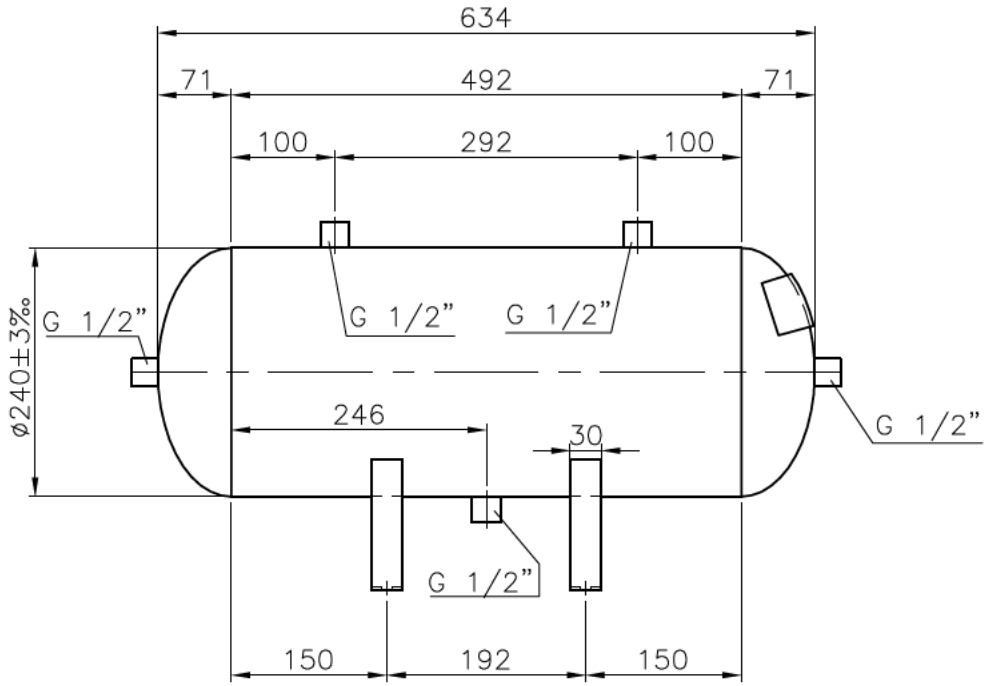

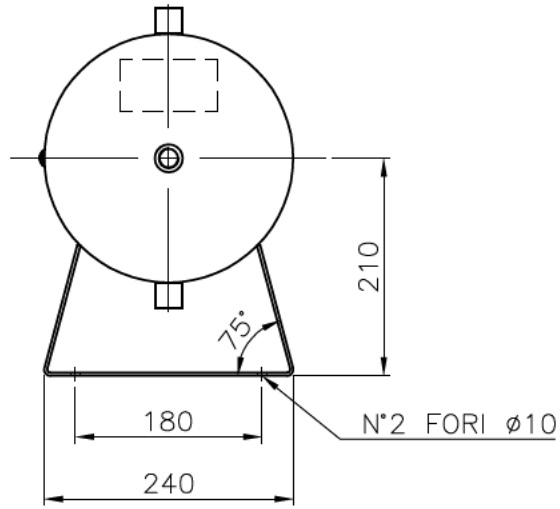

Stamp	Type
V 24 L	PS 11 bar
Tmin −80°C	Tmax +120°C
S/N	YEAR

MATERIALE: AISI 304 L o AISI 316 L

REV.	REASON OF REVISION	DATE	SIGN.

	PREPARED	APPROVED by ENG.MNGR.	REVIEWED by Q.C.MNGR.
DATE	10/01/11		
SIGNATURE	D.BAGNASCO		

SERBATOIO 24LT
ORIZZ. STD.

REPLACE DRAWING

TOLERANCES,IF NOT INDICATED,ACCORDING TO:
C−G SE 03.03/3

SHEET A3
SCALE 1:5

DRAWING No.
VES025EC90-VES025EC91

REV. 00

IN ACCORDO ALLA DIRETTIVA PED 97/23/CE
FLUIDO: ARIA/ACQUA