www.EconomO.fr - Tel.: 01.84.16.97.95 - email : info@economo.fr - Fax : 09 56 80 08 74

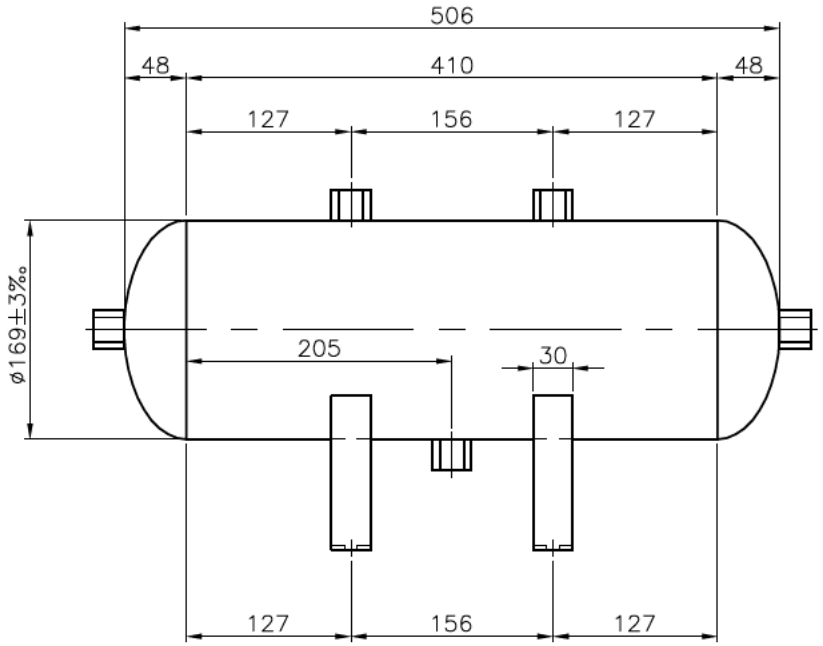


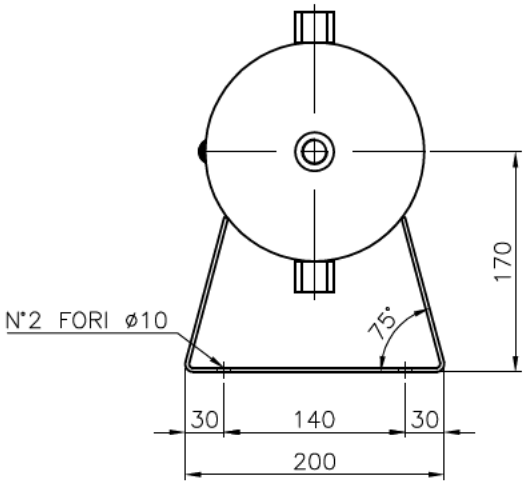


| Stamp | Type |
|---|---|
| V 10 L | PS 11 bar |
| Tmin −80°C | Tmax +120°C |
| S/N | YEAR |

MATERIALE: AISI 304 L o AISI 316 L

| REV. | REASON OF REVISION | DATE | SIGN. |
|---|---|---|---|
| | | | |

| | PREPARED | APPROVED by ENG.MNGR. | REVIEWED by Q.C.MNGR. |
|---|---|---|---|
| DATE | 10/01/11 | | |
| SIGNATURE | D.BGANSCO | | |

REPLACE DRAWING

SURFACE TREATEMENTS

TOLERANCES,IF NOT INDICATED,ACCORDING TO:
C−G SE 03.03/3

SHEET A3

SCALE 1:4

SERBATOIO 10LT
ORIZZ. STD.

DRAWING No.
VES025EC86-VES025EC87

REV. 00

IN ACCORDO ALLA DIRETTIVA PED 97/23/CE
FLUIDO: ARIA/ACQUA